DS-KV6113-WPE1(B)
Video Intercom Villa Door Station

Key Feature

- Support Wifi (Only available in DS-KV6113-WPE1(B) model), convenient setting up and no wiring required
- Support web configuration
- Nice industry design, IP65, 2 indicator integrated
- Internal Mifare card reader, 1-ch Indoor station access control
- Noise suppression and echo cancellation
- 2MP HD Camera with IR supplement
- Standard PoE/ 12 VDC

Specification

System parameters	
Operation system	Embedded Linux operation system
Flash	16 M, 32 M
RAM	256 M
CPU	Embedded MCU Processor
Display parameters	
Size	/
Operation method	/
Type	/
Resolution	/
Video parameters	
Video compression standard	H.264
Supplement light	IR supplement
Lens	1
FOV	Horizontal: 129° Vertical: 75°
WDR	True WDR
Pixel	Main stream: 1920 × 1080p, 720p Sub stream: 704 × 576
Audio parameters	
Audio compression standard	G.711 U
Audio input	Built-in omnidirectional microphone
Audio output	Built-in loudspeaker
Audio compression bitrate	64 Kbps
Audio quality	Noise suppression and echo cancellation
Volume adjustment	Adjustable
Capacity	
Fingerprint capacity	/
User capacity	2000
Face capacity	/
Linked indoor station	1
Event capacity	/
Network parameters	
Communication protocol	TCP/IP, RTSP

Wired network	10/100 Mbps self-adaptive Ethernet
Wi-Fi	Support
Bluetooth	/
3G/4G	/
Received frequency	2.4 to 2.4835GHz
Transmitted frequency	2.4 to 2.4835 GHz
Bandwidth	20 to 40 MHz
Frequency power	802.11b:16dBm +/- 1.5dBm 802.11g:15dBm +/- 1.5dBm 802.11n(ht20):14dBm +/- 1.5dBm 802.11n(ht40):12dBm +/- 1.5dBm
Device interfaces	
Alarm input	4
Network interface	1
TAMPER	1
RS-485	1
Exit button	1
USB	0
Wiegand	0
TF card	0
Alarm output	0
Lock control	1
Door contact input	1
Power interface	1
General	
Button	1
Indicator	2
Installation	Surface mounting
Working temperature	-40° C to +55° C(-40° F to 131° F)
Working humidity	10% to 95%
Indicator	2
Weight	265 g
Protective level	IP65
Power supply method	IEEE802.3af, standard PoE 12 VDC
Dimensions	138 mm × 65 mm × 27 mm
Battery	/
Application environment	Outdoor
Power consumption	＜ 10 W

Available Model

DS-KV6113-WPE1(B)

Appearance and Interfaces

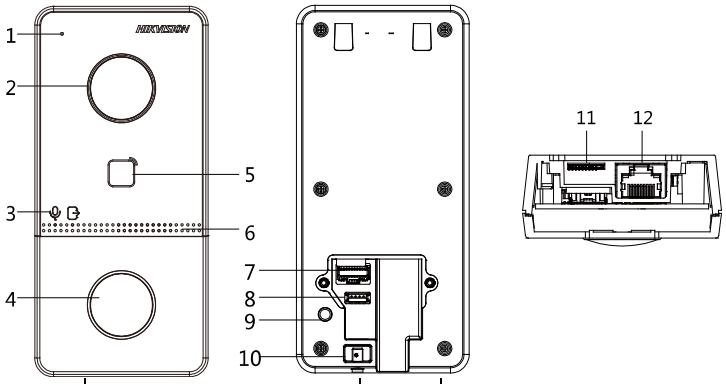

No.	Description	No.	Description
1	Microphone	7	Terminals
2	Camera	8	Debugging Port
3	Indicator	9	TAMPER
4	Button	10	Set Screw
5	Card Reading Area	11	TF Card Slot
6	Loudspeaker	12	Network Interface

Dimension

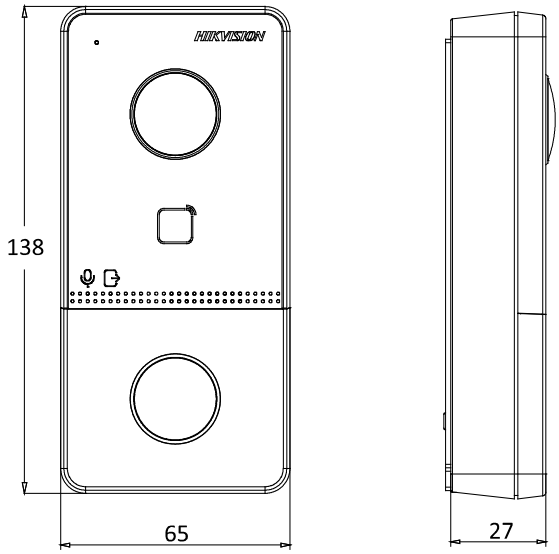

Distributed by

Headquarters
No.555 Qianmo Road, Binjiang District,
Hangzhou 310051, China
T +86-571-8807-5998
overseasbusiness@hikvision.com

Hikvision USA
T +1-909-895-0400
sales.usa@hikvision.com

Hikvision Europe
T +31-23-5542770
sales.eu@hikvision.com

Hikvision UK & Ireland
T +01628-902140
sales.uk@hikvision.com

Hikvision UAE
T +971-4-4432090
salesme@hikvision.com

Hikvision Russia
T +7-495-669-67-99
saleru@hikvision.com

Hikvision Australia
T +61-2-8599-4233
salesau@hikvision.com

Hikvision Italy
T +39-0438-6902
info.it@hikvision.com

Hikvision South Africa
Tel: +27 (10) 0351172
sale.africa@hikvision.com

Hikvision Singapore
T +65-6684-4718
sg@hikvision.com

Hikvision Korea
T +82-(0)31-731-8817
sales.korea@hikvision.com

Hikvision India
T +91-22-28469900
sales@pramahikvision.com

Hikvision Brazil
T +55 11 3318-0050
Latam.support@hikvision.com

Hikvision France
T +33(0)1-85-330-450
info.fr@hikvision.com

Hikvision Spain
T +34-91-737-16-55
info.es@hikvision.com

Hikvision Poland
T +48-22-460-01-50
info.pl@hikvision.com

Hikvision Canada
T +1-866-200-6690
sales.canada@hikvision.com

Hikvision Turkey
T +90 (216)521 7070- 7074
sales.tr@hikvision.com

Hikvision Kazakhstan
T +7-727-9730667
nikia.panfilov@hikvision.ru

Hikvision Tashkent
T +99-87-1238-9438
uzb@hikvision.ru

Hikvision Indonesia
T +62-21-2933759
Sales.Indonesia@hikvision.com

Hikvision Thailand
T +662-275-9949
sales.thailand@hikvision.com

Hikvision Malaysia
T +601-7652-2413
sales.my@hikvision.com

Hikvision Vietnam
T +84-974270888
sales.vt@hikvision.com

Hikvision Hong Kong
T +852-2151-1761
info.hk@hikvision.com

Hikvision Colombia
sales.colombia@hikvision.com

© Hikvision Digital Technology Co., Ltd. 2020 | Data subject to change without notice |