DS-2CE12DF3T-F
2 MP ColorVu Fixed Bullet Camera

- High quality imaging with 2 MP, 1920 × 1080 resolution
- 24/7 color imaging with F1.0 aperture
- Clear imaging against strong back light due to 130 dB true WDR technology
- 3D DNR technology delivers clean and sharp images
- 2.8 mm, 3.6 mm, 6 mm fixed focal lens
- Up to 40 m white light distance for bright night imaging
- One port for four switchable signals (TVI/AHD/CVI/CVBS)
- Water and dust resistant (IP67)

▪ Specification

Camera	
Image Sensor	2 MP CMOS
Signal System	PAL/NTSC
Resolution	1920 (H) × 1080 (V)
Frame Rate	TVI: 1080p@25fps/30fps CVI: 1080p@25fps/30fps AHD: 1080p@25fps/30fps CVBS: PAL/NTSC
Min. Illumination	0.0005 Lux @ (F1.0, AGC ON), 0 Lux with white light ON
Shutter Time	PAL: 1/25 s to 1/50,000 s; NTSC: 1/30 s to 1/50,000 s
Slow Shutter	Max. 16 times
Lens	2.8 mm, 3.6 mm, 6 mm Fixed Lens
Field of View	2.8 mm, horizontal FOV: 98°, vertical FOV: 52°, diagonal FOV: 116° 3.6 mm, horizontal FOV: 77°, vertical FOV: 42°, diagonal FOV: 91° 6 mm, horizontal FOV: 51°, vertical FOV: 28°, diagonal FOV: 59°
Lens Mount	M12
Light Alarm	Solid Light Alarm (White Light)
Day & Night	Color
WDR (Wide Dynamic Range)	≥130 dB
Angle Adjustment	Pan: 0° to 360°, Tilt: 0° to 180°, Rotation: 0° to 360°
Menu	
White Light	Auto/Off
Image Mode	STD/HIGH-SAT/HIGHLIGHT
AGC	Yes
Day/Night Mode	Color
White Balance	Auto/Manual
AE (Auto Exposure) Mode	WDR, BLC, HLC, Global, HLS
Privacy Mask	4 programmable privacy masks
Motion Detection	4 programmable motion areas
Noise Reduction	3D DNR/2D DNR
Language	English
Function	Brightness, Contrast, Mirror, Defective Pixel Correction, Sharpness, Anti-Banding, Smart Light
Lighting Mode	White Light
Interface	
Video Output	Switchable TVI/AHD/CVI/CVBS
General	
Operating Conditions	-40°C to 60°C (-40°F to 140°F), Humidity: 90% or less (non-condensing)
Power Supply	12 VDC ± 25%, **You are recommended to use one power adapter to supply the power for one camera.*
Consumption	Max. 4.2 W
Protection Level	IP67
Material	Metal
White Light Range	Up to 40 m
Communication	HIKVISION-C
Dimension	194.2 mm × 78 mm × 74.5 mm (7.65" × 3.07" × 2.93")
Weight	Approx. 514.5 g (1.13 lb.)

▪ Dimension

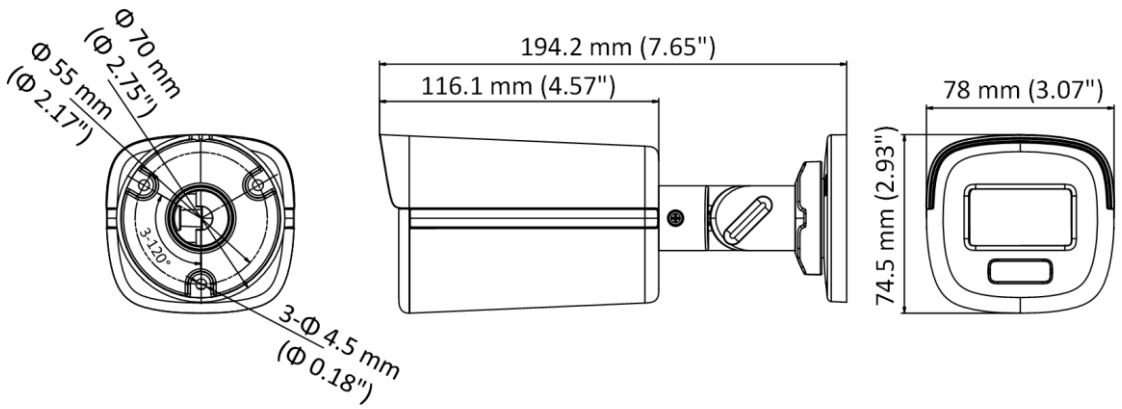

▪ Accessory

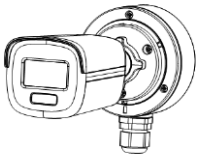

Distributed by DS-1280ZJ-XS

▪ Available Model

DS-2CE12DF3T-F

Headquarters
No.555 Qianmo Road, Binjiang District,
Hangzhou 310051, China
T +86-571-8807-5998
overseasbusiness@hikvision.com

Hikvision USA
T +1-909-895-0400
sales.usa@hikvision.com

Hikvision Europe
T +31-23-5542770
sales.eu@hikvision.com

Hikvision UK & Ireland
T +01628-902140
sales.uk@hikvision.com

Hikvision UAE
T +971-4-4432090
salesme@hikvision.com

Hikvision Russia
T +7-495-669-67-99
saleru@hikvision.com

Hikvision Australia
T +61-2-8599-4233
salesau@hikvision.com

Hikvision Italy
T +39-0438-6902
info.it@hikvision.com

Hikvision South Africa
Tel: +27 (10) 0351172
sale.africa@hikvision.com

Hikvision Singapore
T +65-6684-4718
sg@hikvision.com

Hikvision Korea
T +82-(0)31-731-8817
sales.korea@hikvision.com

Hikvision India
T +91-22-28469900
sales@pramahikvision.com

Hikvision Brazil
T +55 11 3318-0050
Latam.support@hikvision.com

Hikvision France
T +33(0)1-85-330-450
info.fr@hikvision.com

Hikvision Spain
T +34-91-737-16-55
info.es@hikvision.com

Hikvision Poland
T +48-22-460-01-50
info.pl@hikvision.com

Hikvision Canada
T +1-866-200-6690
sales.canada@hikvision.com

Hikvision Turkey
T +90 (216)521 7070- 7074
sales.tr@hikvision.com

Hikvision Kazakhstan
T +7-727-9730667
nikia.panfilov@hikvision.ru

Hikvision Tashkent
T +99-87-1238-9438
uzb@hikvision.ru

Hikvision Indonesia
T +62-21-2933759
Sales.Indonesia@hikvision.com

Hikvision Thailand
T +662-275-9949
sales.thailand@hikvision.com

Hikvision Malaysia
T +601-7652-2413
sales.my@hikvision.com

Hikvision Vietnam
T +84-974270888
sales.vt@hikvision.com

Hikvision Hong Kong
T +852-2151-1761
info.hk@hikvision.com

Hikvision Colombia
sales.colombia@hikvision.com

© Hikvision Digital Technology Co., Ltd. 2020 | Data subject to change without notice |